SPRAYMASTER CLASSIC DEAERATORS (SINGLE TANK)

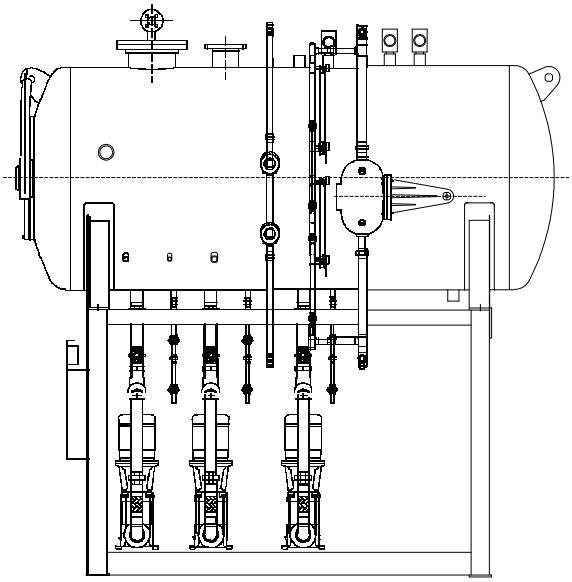

CONTENTS

FEATURES AND BENEFITS H1a-3
PRODUCT OFFERING H1a-4
DIMENSIONS AND RATINGS H1a-7
RETURN ON INVESTMENT H1a-10
Flash Steam H1a-10
Exhaust Steam H1a-10
Surface Blowdown H1a-10
Chemical Treatment H1a-10
Makeup Water H1a-10
Sewer H1a-10
Intangibles H1a-10
SAMPLE SPECIFICATIONS H1a-11

ILLUSTRATIONS

Figure H1a-1. Spraymaster Tank Supports and Saddles, Details and Dimensions H1a-7
Figure H1a-2. Spraymaster Deaerator Dimensions and Ratings (Single Tank) – Sheet 1 of 2 ..... H1a-8

TABLES

Table H1a-1. Spraymaster Deaerator Product Offering H1a-4

The Cleaver-Brooks designed deaerator assures high purity effluent by removing oxygen and other dissolved gases in boiler feed. Thus, it is the answer to long- lasting boiler equipment for industrial and commercial boiler users. Built of corrosion-resistant alloys for lifetime service, the deaerator employs those basic principles of gas removal proven most effective and economical to every boiler owner. Contact your local Cleaver-Brooks authorized representative for component sizing information.

FEATURES AND BENEFITS

Low Profile Design:

- Low head allows installation in space restricted areas.

Two-Stage Deaeration in a Common Vessel:

- Recycle pumps are not required.
- Packaged for easy maintenance.

ASME Code Design (Section VIII):

- Assures deaerator vessel quality in materials and fabrication to meet safety requirements.

Internal Stainless Steel Vent Condenser:

- Protects deaerator vessel against corrosive gases while providing a means for removal of corrosive gases from boiler feedwater.

Self-Cleaning Water Spray Valve:

- Angles associated with the water spray valve assembly and actual water spray pattern, maintains deposit-free surfaces.
- Reduces maintenance requirements.

Internal Automatic Check Valves Prevent Back Flooding:

- Both the water spray valve and steam atomizing valve are in the normally closed position under no flow conditions.
- Prevents steam back-flow through the water spray valve and water back flow through the steam atomizing valve.

Removable Water Spray Inlet Assembly:

- Flanged assembly allows easy access for maintenance and/or inspections.

Stainless Steel Deaeration Assembly:

- Ensures a longer life of wetted materials in intimate contact with corrosive liquids and released corrosive gases.

Pressurized Tank Reduces Flashing and Minimal Venting:

- Recovery of exhaust and turbine steam.
- Saves Btu's that would normally be exhausted to atmosphere. Improves plant efficiency.

Auto Vent Valve Eliminates Dissolved Gases at Start-Up:

- Atmospheric contamination virtually eliminated for incoming water.

Exceeds ASME Recommendations for Oxygen Level:

- Guaranteed to remove oxygen concentrations to 0.005 cc/liter while operating between 5% and 100% capacity.
- Carbon dioxide concentrations are practically reduced to zero.

Capacity Not Affected by Mixed Inlet Temperature:

- Consistent performance under variable conditions.

Integral Level Control Automatically Introduces Cold Water Make-Up to Supplement Condensate Only When Necessary to Meet Boiler Demand:

- Saves Btu's by accepting condensate before cold make-up water. Maintains a minimal water level within the deaerator vessel to prevent damage to the boiler feedpumps, and to maintain system operation.

Variety of Tank Sizes to Handle Volume-Swings in Condensate Return:

- Provides flexibility for selecting a tank for specific applications, limiting the loss of hot condensate to drain.

Packaged Units for Cost Effective Installation:

- Complete packages are pre-fabricated in the manufacturing facility to ensure piping alignment and control wiring function. The unit is partially disassembled, and match marked for efficient field re-assembly.

Available in Horizontal and Vertical Configuration:

- Provides adaptability for installation in space restricted areas.

Internal Pump Suction Vortex Breakers:

- Eliminates the problems of loss in NPSHA and cavitation associated with the creation of vortices within pump suction piping.

PRODUCT OFFERING

Information in this section applies directly to Cleaver- Brooks packaged Spraymaster Deaerators ranging from 7,000 to 280,000 pounds/hour. For larger capacities contact your local Cleaver-Brooks authorized representative. The product offering for Spraymaster Deaerators is shown in Table H1a-1.

Table H1a-1. Spraymaster Deaerator Product Offering

MODEL NO.	RATING (LBS/H)	TANK CAPACITY	STORAGE CAP. (MIN)
SM- 7	7000	230	16
SM-15	15000	300	10
SM- 30	30000	600	10
SM- 45	45000	900	10
SM -70	70000	1400	10
SM-100	100000	2000	10
SM-140	140000	2800	10
SM-200	200000	4000	10
SM- 280	280000	5600	10

NOTE: Model number designation (example, SM-7) is: SM = Spraymaster Deaerator. 7 = 7,000 lbs/hr rating. Optional tank sizes available, contact your local Cleaver-Brooks authorized representative.

The Spraymaster Deaerator is a pressurized low-headroom system designed to remove dissolved oxygen in boiler feedwater to 0.005 cc per liter, or less, and eliminate carbon dioxide. A typical deaerator package includes the deaerator tank mounted on a stand of appropriate height along with all operating controls, feed pumps assembled and piped (typically knocked down for shipment and field assembly). The tank conforms to section VIII of the ASME code.

The main deaerating portion is located internally and consists of a water collector and steam atomizing valve. Built into a flange on top of the tank is a spring loaded water spray nozzle which includes an automatic and manual vent valve.

Packaged Spraymaster systems offer substantial advantages through, lower cost installation and simplified operation and maintenance. Spraymaster Deaerators arrive on site ready for hookup to your water, steam, and electric power connections.

The deaerator stand comes with feed pump/motor set mounted on a solid base. The base is specially reinforced to prevent vibration wear on vital system components. Rugged square structural tubing combines lasting strength with generous working space for inspection or routine servicing.

Control Panel

The control panel, complete with starters, fuse protection, switches, lights and pre- wired terminal blocks is mounted on the stand assembly. Wiring to feed pump motor and all controls is standard.

Deaerator Tank

ASME construction - certified to 50 psig. All tanks provided with manhole, individual pump suction tappings and other openings as required. Saddles or legs standard on all sizes. Select from sizes for 5 to 30 minutes of storage to overflow.

Piping

Pump and motor sets are mounted on individual bases before mounting on stand base.

Individual suction piping (including strainer, shutoff valve, flexible connector) are provided for all feed pumps.

Standard Equipment

- Spraymaster deaerator.
- Deaerator storage tank.
- Deaerator water inlet atomizing valve.
- Deaerator steam inlet atomizing valve.
- Deaerator manual and automatic vent.
- Gauge glass.
- Steam pressure gauge.
- Feedwater thermometer.
- Required tappings.

Optional Equipment

- Steam pressure reducing valve.
- Three valve bypass and strainer (PRV).

- Water level controller with make-up valve.
- Three valve bypass and strainer (MUV).
- Steam relief valves.
- High water alarm.
- Low water alarm.
- Low water pump cut off.
- High temperature condensate diffuser tube (over 227 °F).
- Boiler feed pump and motor sets.
- Recirculation orifice or relief valve
- Suction shutoff valve.
- Suction strainer.
- Suction flexible fitting.
- Discharge check valve.
- Discharge shutoff valve.
- Discharge pressure gauge.
- Discharge manifold.
- Overflow drainer.
- Control panel.
- Chemical feed quill.
- Vacuum breaker.
- Insulation and lagging.
- Sentinel relief valve.
- Tank drain valve.
- Back pressure relief valve.
- Magnesium anode (not available with lined tanks).
- Stand.

Packaging

- Fully packaged, factory piped and wired.
- Half packaged, suitable for field erection with interconnecting piping and wiring by others.

DIMENSIONS AND RATINGS

Dimensions and ratings for Spraymaster Deaerators are shown in Figure H1a-1 and Figure H1a-2.

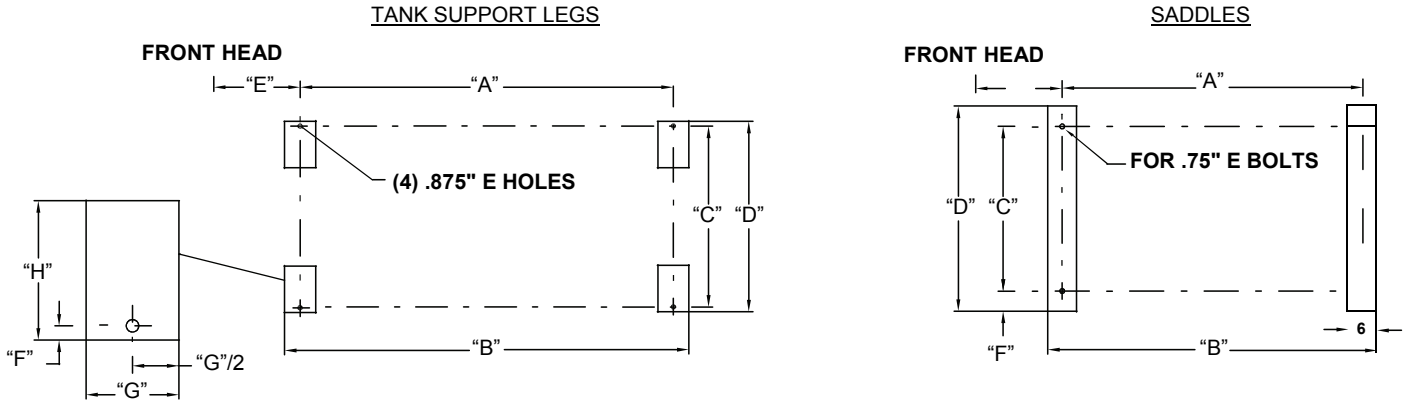

	TANK CAPACITY (GALLONS)											
	230	**300**	**450**	**600**	**700**	**900**	**1000**	**1400**	**2000**	**2800**	**4000**	**5600**
	LEGS						**SADDLES**					
A	47	67.5	102	86	102	95	102.5	138	156	138	128	145
B	52.5	74	108.5	92.5	108.5	101	108.5	144	162	144	134	151
C	29.5	38	38	44.75	44.75	44.75	44.75	50	52	62	72	83
D	31.25	40	40	46.75	46.75	57	57	62	67	77.5	88	98.75
E	12	14.25	16	16	17	17	19.75	19	21.5	22.5	24.5	26
F	0.875	1	1	1	1	6.125	6.125	6	7.5	7.75	8	7.875
G	5.5	6.5	6.5	6.5	6.5	N/A	N/A	N/A	N/A	N/A	N/A	N/A
H	7	9.75	9.75	13.75	13.75	N/A	N/A	N/A	N/A	N/A	N/A	N/A

Figure H1a-1. Spraymaster Tank Supports and Saddles, Details and Dimensions

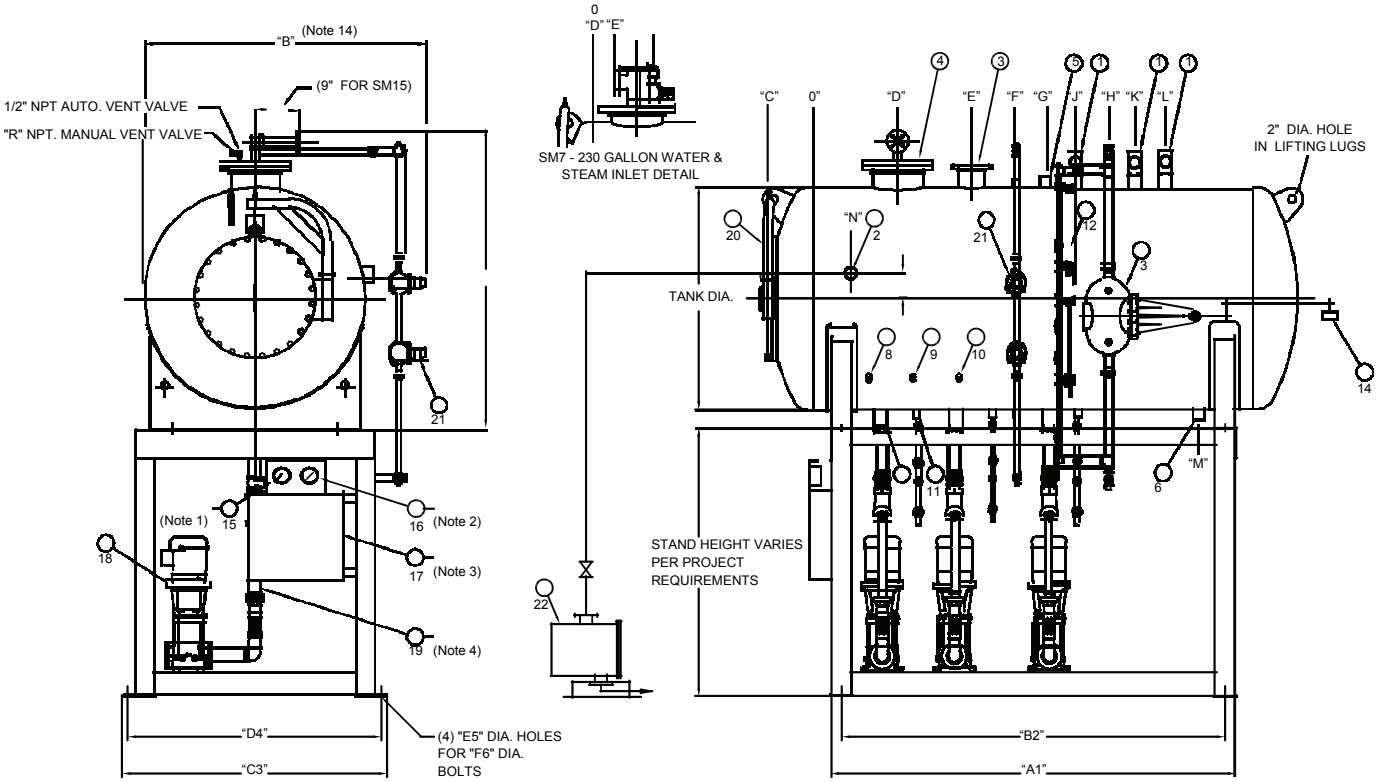

Front View **Right Side**

1. Mounted at dim. "H" (top of tank) on non-packaged units.
2. Tank mounted on non-packaged units.
3. Packaged units only. Mounted on front of stand.
4. Suction piping includes strainer, gate valve and flexible connector.
5. All couplings are 3000# F.S.
6. All flanges are 150# F.F. except as noted.
7. SM-200 is the same as SM-100 and SM-280 is the same as SM-140 except 2 water & steam inlets are used per vessel (dual inlet).
8. Customer to plug all fittings not being used.
9. Mount tank above pump at elevation necessary for static head including safe allowance for piping friction as approved by pump manufacturer.
10. Deaerator tank is built to ASME Code.
11. Accompanying dimensions, while sufficiently accurate for layout purposes, must be confirmed for construction by certified dimension prints.
12. Add Suffix "P" to Model No. for packaged units (SMP-45).
13. Optional tanks available for 5 minutes storage (except SM7 & SM15), other combinations of capacities as required - contact your local Cleaver-Brooks authorized representative.
14. Dimension "B" will change depending on controls required - contact your local Cleaver-Brooks authorized representative.
15. No interconnecting piping or wiring furnished on non-packaged units unless specified, contact your local Cleaver-Brooks representative for specific piping or wiring furnished on packaged assemblies.
16. Weights shown are without controls or packaging - contact your local Cleaver-Brooks representative for additions.
17. Capacities other than shown as standard available by proper selection of controls - contact your local Cleaver-Brooks authorized representative.
18. Optional tank sizes and ratings available - contact your local Cleaver-Brooks authorized representatives.
19. Lifting lugs are for lifting empty tank only.

Figure H1a-2. Spraymaster Deaerator Dimensions and Ratings (Single Tank) – Sheet 1 of 2

RATINGS		SM TANK											
Capacity (Gal. to Overflow)		230	300	450	600	700	900	1000	1400	2000	2800	4000	5600
Tank Weight (Dry) (lb)													
Tank Weight (Flooded) (lb)		3600	7850	10700	11750	13450	15500	17000	25450	33650	41550	52500	73600
Tank Size (Dia x Length)		36 x 71	48 x 96	48 x 134	54 x 118	54 x 136	60 x 129.5	60 x 142.5	66 x 177	72 x 200	84 x 184	96 x 179	108 x 199
TANK DIMENSIONS													
A	Overall Height	58	70	70	76	76	82	82	88	94	108	120	132
B	Overall Width	51	63	63	69	69	75	75	81	87	99	111	123
C	Front Head	8	10	10	11	11	12	12	14	15	17.5	20	21.5
D	Water Inlet - SM 7	17.5	N/A	N/A	N/A	N/A	N/A	N/A	N/A	N/A	N/A	N/A	N/A
	Water Inlet - SM 15 thru 100	N/A	20	22	22	22	22	22	22	22	22	22	22
	Water Inlet - SM140	N/A	N/A	N/A	N/A	N/A	N/A	N/A	18	18	18	18	18
E	Steam Inlet	6.5	40	42	42	42	42	42	42	42	42	42	42
F	Level Alarm	32	50	54	54	54	54	54	56	56	56	56	56
G	High Temperature Return	27	55	62	62	62	62	62	63	63	63	63	63
H	Level Control	44.5	60	79	79	79	79	79	90	90	90	90	90
J	Relief Valve	38.5	66 *	70	70	70	70	70	100	100	100	100	100
K	Relief Valve	50	66 *	86	86	86	86	86	111	111	111	111	111
L	Relief Valve	N/A	N/A	N/A	N/A	N/A	N/A	N/A	122	122	122	122	122
M	Drain	10	30	98	84	98	93	103	135	153	135	127	144
N	Overflow	5	10	10	10	10	10	10	14	14	14	14	14
P	Overflow	10	0	0	3.75	3.75	6.75	6.75	6.5	8	14.5	26.5	27.5
	Sprayhead	SM15		SM30		SM45		SM70		SM100/200		SM140/280	
R	Manual Vent Valve Size	0.75		0.75		0.75		1		1.5		2	
STAND DIMENSIONS													
Capacity (Gal. to Overflow)		230	300	450	600	700	900	1000	1400	2000	2800	4000	5600
A1	Overall Length	52.5	74	108.5	92.5	108.5	101	108.5	144	162	149	134	151
B2	C/L to C/L Bolt Holes	47.5	69	102.5	87.5	102.5	95	102.5	138	155	146	127	144
C3	Overall Width	49	62	66	64	66	71	71	76	83	86.5	102	113
D4	C/L to C/L Bolt Holes	46	59	63	61	63	68	68	73	80	79.5	99	110
E5	Hole Size	0.75	1	1	0.75	1	1.125	1.125	1.25	1.125	1.125	1.125	1.25
F6	Anchor Bolt Size	0.625	0.875	0.875	0.625	0.875	1	1	1.125	1	1	1	1.125
CONNECTIONS AND TRIM													
1	Relief Valve Size	Contact Your Local Cleaver-Brooks Authorized Representative											
2	Overflow Size	1.5" NPT	3" NPT	3" NPT	3" NPT	3" NPT	3" NPT	3" NPT	4"-150# FF	4"-150# FF	4"-150# FF	6"-150#	6"-150# FF
3	Steam Inlet Size	See Table Below											
4	Water Inlet Size	See Table Below											
5	High Temperature Return Size	1.5" NPT	1.5" NPT	2" NPT	2" NPT	2" NPT	2" NPT	2" NPT	3" NPT	3" NPT	3" NPT	3" NPT	3" NPT
6	Drain Size	1.5" NPT	2" NPT	2" NPT	2" NPT	2" NPT	2" NPT	2" NPT	2" NPT	2" NPT	2" NPT	2" NPT	2" NPT
7	Suction Size	2.5" NPT	2.5" NPT	2.5" NPT	2.5" NPT	2.5" NPT	2.5" NPT	2.5" NPT	4"-150# FF	4"-150# FF	4"-150# FF	4"-150#	4"-150# FF
8	Thermometer (3/4" NPT)												
9	Sample (1/2" NPT)												
10	Chemical Feed (1" NPT)												
11	Recirculation (1" NPT)												
12	Gauge Glass Assembly												
13	Level Controller (1.5" NPT)												
14	Make-Up Valve												
15	Pressure Gauge												
16	Thermometer												
17	Control Panel (Optional)												
18	Feed Pump/Motor (Optional)												
19	Suction Piping (Optional)												
20	Manway Size - SM 7	20"	N/A	N/A	N/A	N/A	N/A	N/A	N/A	N/A	N/A	N/A	N/A
	Manway Size - SM 15 thru 70	N/A	28"	28"	28"	28"	28"	28"	28"	28"	28"	28"	28"
	Manway Size - SM100, 200	N/A	32"	32"	32"	32"	32"	32"	32"	32"	32"	32"	32"
	Manway Size - SM140, 280	N/A	N/A	N/A	N/A	N/A	N/A	N/A	36"	36"	36"	36"	36"
21	Level Alarms (Optional) (1" NPT)												
22	Overflow Drainer (Optional)												
	RATINGS for												
	SPRAYMASTER MODEL	TANK SIZES		RATING (lb/hr)		Conn 3 Steam Inlet		Conn 4 Water Inlet					
	SM-7	230		7000		3"-150# FF Flg		1" NPT					
	SM-15	300 thru 700		15000		6"-150# FF Flg		1.5"-150# RF Flg					
	SM-30	300 thru 5600		30000		6"-150# FF Flg		2"-150# RF Flg					
	SM-45	300 thru 5600		45000		6"-150# FF Flg		2"-150# RF Flg					
	SM-70	300 thru 5600		70000		6"-150# FF Flg		2.5"-150# RF Flg					
	SM-100	300 thru 5600		100000		6"-150# FF Flg		3"-150# RF Flg					
	SM-140	2000 thru 5600		140000		8"-150# FF Flg		4"-150# RF Flg (2)					
	SM-200 (NOTE 7)	2000 thru 5600		200000		6"-150# FF Flg		3"-150# RF Flg					
	SM-280 (NOTE 7)	2000 thru 5600		280000		8"-150# FF Flg		4"-150# RF Flg (2)					

* 2 relief valve tappings for SM 300 located at 66" are offset 6" on either side of top centerline.

Figure H1a-2. Spraymaster Deaerator Dimensions and Ratings (Single Tank) – Sheet 2 of 2

RETURN ON INVESTMENT

Payback for a pressurized deaerator verses an atmospheric boiler feed system is based on an additional capital expenditure required divided by the yearly operating cost savings. The differential in yearly operating costs are in the following areas:

- Flash steam
- Exhaust steam
- Blowdown
- Chemical treatment
- Makeup water
- Sewer
- Intangibles

Flash Steam

A percentage of the high-pressure condensate returns will flash to steam and be lost in an atmospheric vessel application. This flash steam loss can be converted to an energy loss and associated fuel cost.

Exhaust Steam

Exhaust steam cannot be recovered in an atmospheric vessel application. This exhaust steam loss can be converted to energy loss and associated fuel cost. An example would be steam turbine exhaust.

Surface Blowdown

Increased makeup water is required because of lost flash and exhaust steam. This increase in makeup water requires an increase of surface blowdown. This is directly related to cycles of concentration in the boiler. The additional blowdown loss can be converted to an energy loss and associated fuel cost. The additional surface blowdown may also result in an increase in capital expenditure for a larger blowdown heat recovery system.

Chemical Treatment

Dissolved oxygen content in an atmospheric boiler feedwater system is a function of water temperature. Lowering the dissolved oxygen content below what is naturally present, based on mixed water temperature at atmospheric pressure, requires the addition of a chemical treatment program. The most common oxygen scavenger used is sodium sulfite. Sodium sulfite reacts with dissolved oxygen as follows:

$$2Na_2SO_3 + O_2 \rightarrow 2Na_2SO_4$$

Theoretically, it takes approximately 8 ppm of sodium sulfite as Na_2S0_3 to scavenge 1 ppm of dissolved O_2

Makeup Water

Increased make-up water is required because of lost flash steam, lost exhaust steam, and additional surface blowdown. This additional makeup water can be associated to a cost. Makeup water cost should be a combination of the utility charge plus pretreatment equipment consumable costs.

Sewer

Utilities often base a sewer charge on make-up water usage. Increased makeup water usage with an associated increase in surface blowdown can affect these costs.

Intangibles

Some cost savings are difficult to calculate - in general, best practices in deaeration will prolong the life of boiler room equipment, reducing repair and maintenance costs.

SAMPLE SPECIFICATIONS

CONTENTS

PART 1 GENERAL....H1a-12
1.1 DEAERATOR SPECIFICATION....H1a-12
PART 2 PRODUCTS....H1a-12
2.1 HARDWARE....H1a-12
A. Deaerator....H1a-12
B. Make Up Valve and Controller....H1a-14
C. Steam Pressure Reducing Station....H1a-15
D. Boiler Feedwater Pump And Motor Set....H1a-16
E. Control Panel....H1a-16

The following sample specifications are provided by Cleaver-Brooks to assist you in specifying your customer's specific needs and application.

PART 1 GENERAL

1.1 DEAERATOR SPECIFICATION

1. Provide one Cleaver-Brooks Model _____ spray type, pressurized, horizontal deaerator rated at _____ pounds per hour. The system shall be of the single tank design and shall guarantee oxygen removal to not more than 0.005 ccs/liter in the effluent throughout all load conditions between 5 and 100 percent. Two-compartment designs are not acceptable. The deaerator shall be designed for operation at 5 psig, but shall be suitable for use from 2 to 15 psig. Atmospheric operating designs are not acceptable.

PART 2 PRODUCTS

2.1 HARDWARE

A. Deaerator

1. Feedwater and condensate shall be admitted to the deaerator through a single spring-loaded, self-cleaning, adjustable stainless steel spray valve, which shall provide proper internal vent condensing and water distribution at any load between 5 and 100 percent of rated capacity. The water temperature in the primary heating and vent concentrating section is to be raised within 2 or 3 °F of steam temperature and most of the gases released. The water is then to be collected in a conical water collector. From there, it is to flow to an atomizing valve where high velocity steam strikes it, breaks it down into a fine mist, and heats it to a full steam saturation temperature. The mixture is to strike a deflecting baffle, which separates water and steam. Hot, gas-free water is to then drop to the storage compartment to complete the cycle. The steam and non-condensables are to flow upward, through the primary heating spray, into the internal vent concentrating section, where they contact the cold influent water. Here, the steam is to be condensed to continue the cycle. Released gasses are discharged to atmosphere through the vent outlet. All internal surfaces, which come in contact with un-deaerated water, shall be constructed of Type 316 stainless steel.
2. Automatic vent valve shall be thermostatically controlled to provide a fast means of venting when a sudden buildup of gases occurs, such as seen at start up. The manual vent valve shall have an orifice for continuous minimum venting. Venting rate shall not exceed 0.1 of 1% of the rated deaerator capacity at 5 psig.

3. The deaerated water storage tank shall have _____ minutes of storage and have a capacity of _____ gallons measured to overflow. The tank shall be _____ diameter x _____ long. An _____ manhole shall be provided for access. All nozzles 3" and under shall be 3000 lbs forged steel couplings and over 3" shall be 150 lbs flat face flanges. Heads to be ASME torispherical type constructed of ASTM A516 GR 70 carbon steel with a minimum thickness of 0.25 inches. Shell plate to be fabricated of ASTM A36 carbon steel with a minimum thickness of 0.25 inches. The tank shall be designed in accordance with ASME, Section VIII of the Pressure Vessel Code for 50 psig at 650 °F and stamped accordingly. Certification shall be required. Joint efficiencies to be 70% circumferential per Table UW-12, which does not require stress relieving or nondestructive examination.

4. The deaerator loads shall be as specified in the table below.
   Low temperature returns are defined as condensate with a temperature below that of the deaerator operating temperature. High temperature returns are defined as condensate with a temperature above that of the deaerator operating temperature.

LOAD SPECIFICATIONS				
LOAD	**PERCENTAGE**	**LBS/HR**	**TEMP**	**PRESSURE**
Make up		GPM		25 psig Minimum
Pumped Low Temp Returns				10 psig Minimum
High Temp Returns	Not To Exceed 30%			

5. Optional - The tank shall be factory-insulated and lagged with blanket insulation, pins, clips, and a durable steel jacket. Block-type insulation is not acceptable. The blanket insulation is to be fiberglass, 2" thick, 1 lb/cu-ft, and have a rating of R5. Pins are to be located on 18" centers and holding clips attached. The steel jacket or lagging shall have a shell thickness of 18 gauge (0.0478") minimum and head thickness of 18 gauge (0.0478") minimum.

6. Optional - The magnesium or sacrificial anode shall provide cathodic protection against galvanic corrosion. This rod shall be 1-5/16" diameter with a 1/4" steel core to assure a good electrical contact and added strength. The design shall have a small weep hole to signal it has been consumed. Linings shall not be acceptable in this application.

7. Optional - The high temperature diffuser or sparge tube shall be located beneath the normal tank water level. The tube shall be constructed of 2-1/2 inch pipe. This tube shall provide even distribution and blending of high-temperature condensate returns.

8. Optional - The chemical feed quill shall be located beneath the normal tank water level. The quill material shall be constructed of stainless steel. The tube shall provide even distribution and blending of chemical.

9. Optional - The basic deaerator shall be equipped with the following trim and accessories. Piping on packaged units shall comply with ASME Power Piping Code B31.1.

B. Make Up Valve and Controller

1. Option (Mechanical) - _____ " inlet water regulating lever valve with _____ body and _____ connections. The valve Cv shall not exceed _____ and be rated for _____ gpm at _____ psig inlet pressure. The pressure drop across the valve shall not exceed a delta-P of 10 psig. This valve shall be suitable for temperatures up to 300 °F. The valve manufacture shall be _____, Model _____. This valve shall be mechanically controlled by an external float cage with cast iron body and 8" stainless steel float. The float cage manufacturer shall be _____, Model _____.

2. Option (Electronic) - _____" inlet water motorized regulating valve with steel body and threaded NPT connections. Motor shall be 110V bi-directional, with a permanently lubricated gear train, and be directly coupled to the valve stem. The valve Cv shall not exceed _____ and be rated for _____ gpm at _____psi inlet pressure. Valve shall not exceed a delta-P of 10 psig. This valve shall have teflon seats and be suitable for temperatures up to 300 °F. The motorized valve manufacturer shall be _____. This valve shall be electronically controlled by a solid state control with internally mounted capacitance probes. The electronic solid state control shall be able to set desired level point and acceptable deviation. The electronic solid state control shall include a selection for automatic and manual operating mode. The internals shall include two additional probes for high and low water alarm. The controller manufacturer shall be Cleaver-Brooks Model TW82. A solenoid valve and float switch are not acceptable. (Available only in the U.S.)

3. Option (Pneumatic) - _____" inlet water diaphragm actuated regulating valve with cast iron body and _____ connections. The valve shall be globe type with proportional control and a spring opposed diaphragm actuator arranged for 3 - 15 psig operating signal. The valve shall be normally open on loss of air. The valve Cv shall not exceed _____ and be rated for _____ gpm at _____ psig inlet pressure. Valve shall not exceed a delta-P of 10 psig. This valve shall have stainless steel trim with TFE packing and be suitable for temperature up to 410 °F. The diaphragm actuated valve manufacturer shall be _____, Model _____. This valve shall be pneumatically controlled by an external proportional type sensor. The sensor shall be a 14" displacer that produces a pneumatic output signal. The controller manufacturer shall be _____ Model _____. A filter regulator is to be provided to reduce 50 psig instrument air supply to 3 - 15 psig for proper operation.

4. Optional - The make up valve shall include a ANSI Class 125 lb three-valve bypass with inlet Y-type cast iron strainer. Strainer screen to be removable and of stainless steel construction.

C. Steam Pressure Reducing Station

1. Option (Mechanical) - _____" steam pressure reducing valve with cast iron body and _____ connections. The valve shall be a self-contained unit capable of reducing _____ psig saturated steam to the operating pressure of the deaerator at a flow rate of _____ lbs/hr. The valve shall be 250 lb class with stainless steel trim and an adjustable pilot. The valve manufacturer shall be _____, Model _____.
2. Option (Pneumatic) - _____" diaphragm actuated steam pressure reducing valve with cast iron body and _____ connections. The valve shall be globe type with proportional control and a spring opposed diaphragm actuator arranged for _____ psig operating signal. The valve shall be normally closed on loss of air. The valve shall be capable of reducing _____ psig saturated steam to the operating pressure of the deaerator at a flow rate of _____ lbs/hr. This valve shall be 250 lb class and have stainless steel trim. The diaphragm actuated valve manufacturer shall be _____, Model _____. This valve shall be pneumatically controlled by an external transmitter. The transmitter set pressure shall be adjustable. The transmitter manufacturer shall be _____, Model _____.
3. Optional - The steam pressure reducing valve shall include a three valve bypass with Y-type cast iron strainer. Strainer screen to be removable and of stainless steel construction.
4. Optional - Quantity _____, _____" relief valves sized to relieve full capacity of the pressure reducing valve in the event of its failure. Valves to meet Paragraph UG-125 of ASME Unfired Pressure Vessel Code, Section VIII. Valve body to be of bronze construction. Relieving set pressure to be 50 psig. Relief valve manufacturer to be _____, Model_____.
5. Optional - High level alarm switch. This shall be an externally mounted float type switch. The switch shall make contact on rise and break on fall. The float cage construction shall be cast iron. (Not required with electronic make up controller.)
6. Optional - Low level alarm switch. This shall be an externally mounted float type switch. The switch shall make contact on fall and break on rise. The float cage construction shall be cast iron. (Not required with electronic make up controller.)
7. Optional - _____" overflow drainer sized to relieve full capacity at the operating pressure of the deaerator. The overflow drainer shall be a float type trap. The construction is to be a steel housing with stainless steel float ball. The overflow drainer manufacturer shall be _____, Model _____.
8. Optional - Suction piping for pumps shall consist of a gate valve, cast iron Y-type strainer with replaceable stainless steel screen and flexible connector or hose. This piping assembly shall be 125 lb class construction. The vortex breaker shall be located in the tank nozzle. Manifold suction lines are not acceptable.

D. Boiler Feedwater Pump And Motor Set

1. Option (Intermittent) - Quantity _____, turbine type boiler feedwater pump and motor set. Centrifugal type pumps are not acceptable in this application. Pump to be rated for _____ gpm at _____ feet TDH with _____ feet NPSH required. Pump to be _____ materials of construction and have _____ seals for a maximum water temperature of 250 °F. Pump impeller to be hydraulically balanced. The pump shall be mounted on a steel baseplate and flexibly coupled with an OSHA type coupling guard to a _____ hp, _____ phase, _____ Hz, _____ Volt, _____ rpm, _____ enclosure motor. Motor to be non- overloading at the rated condition without using any portion of the service factor. Pump and motor set to be factory aligned prior to shipment. Pump manufacturer to be _____, Model _____, size _____" x _____".

2. Option (Continuous) - Quantity _____, centrifugal type boiler feedwater pump and motor set. Turbine type pumps are not acceptable in this application. Pump to be rated for _____ gpm at _____ feet TDH with _____ feet NPSH required. Pump to be _____ materials of construction as defined by the Hydraulic Institute and have _____ seals for a maximum water temperature of 250 °F. Pump impeller to be hydraulically balanced. The pump shall be mounted on a steel baseplate and flexibly coupled with an OSHA type coupling guard to a _____ hp, _____ phase, _____ Hz, _____ Volt, _____ rpm, _____ enclosed motor. Motor to be non- overloading at the rated condition without using any portion of the service factor. Pump and motor set to be factory aligned prior to shipment. Pump manufacturer to be _____, Model _____, size _____" x _____". A stainless steel recirculation orifice is to be supplied with the pump and shipped loose for field installation to provide minimum bypass flow.

3. Optional - The stand shall elevate the deaerator tank to provide the net positive suction head required by the pump at the rated condition to prevent cavitation plus a 1-1/2 foot safety factor. The stand shall be constructed of heavy square steel tubing for the legs and 1/4" steel plate covering the floor.

E. Control Panel

1. Optional (Base) - Control panel shall be in a NEMA 1 enclosure and wired to the National Electric Code. The wire shall be black number coded. The assembly is to contain individual motor starters with 120 Volt holding coil and fuse protection. Individual green oil-tight pump run lights shall be provided. All switches and lights to have nameplate identification. The assembled panel shall be given a factory continuity test prior to shipment.

2. Optional (Electric Components) - Audible and visual high and low water alarm function shall be provided by a bell or horn with silence switch and individual red oil-tight lights.Control circuit transformer to supply 110-120 Volts, single-phase power supply. The transformer shall be mounted, wired and fused. Auxiliary contacts shall be furnished for chemical feed pump initiation. Contacts shall be normally open.

3. Standard - The deaerator shall have a gauge glass assembly that covers the entire tank diameter. The gauge glass shall be quartz, 0.625 inch diameter by 24 inch maximum length. Each length of glass shall be furnished with a bronze gauge cock set and protector rods. The deaerator shall be supplied with a pressure gauge that has a 4-1/2 inch dial with a 0-60 psig range and a thermometer with a 50 to 300 °F range. Packaged units are required to have both gauges bracket- mounted at eye level. The deaerator is to be hand cleaned with a solvent to SSPC- SP-1 standards prior to painting. Prime coated to not less than 1 mil thick and finish coated with an enamel paint to not less than 1 mil thick prior to shipment. Unit is to be knocked down for shipment. Piping is to be

matched marked. Three, bound, Operating and Maintenance manuals to be provided. Warranty period to be twelve months after start-up or eighteen months after shipment, whichever comes first.

Notes